TOWN & COUNTRY INDUSTRIES

COLONIAL SHUTTER - PATENT #8126298

IMPACT / NON-IMPACT - NON-HVHZ

NON-SITE-SPECIFIC STRUCTURAL PERFORMANCE EVALUATION. A DESIGN PROFESSIONAL SHALL BE RESPONSIBLE FOR CERTIFYING THE APPLICATION OF THIS INFORMATION TO ANY SITE-SPECIFIC LOCATION.

NOTE REGARDING USE OF THIS DOCUMENT & USE OUTSIDE FLORIDA:

NON-SITE-SPECIFIC STRUCTURAL PERFORMANCE EVALUATION. THIS PRODUCT EVALUATION IS VALID FOR USE IN **FLORIDA ONLY**. USE OF THIS EVALUATION REQUIRES A REVIEW & CERTIFICATION BY A LOCAL DESIGN PROFESSIONAL WHO SHALL BE RESPONSIBLE FOR THE PROPER ADAPTATION OF THIS GENERAL PERFORMANCE EVALUATION TO ANY SITE-SPECIFIC PROJECT. CONTACT THIS OFFICE AT **ENGINEERINGEXPRESS.COM/QUOTE** FOR ASSISTANCE WITH YOUR PROJECT-SPECIFIC NEEDS & FOR ADAPTATION & CERTIFICATION OF THIS DOCUMENT OUTSIDE OF FLORIDA.

COLBY BENNARDO, PE
PE# 95197 CA# 9885

COLBY BENNARDO LICENSE No 95197 STATE OF FLORIDA PROFESSIONAL ENGINEER

Digitally signed by Colby Bennardo
Date: 2023.08.21 13:59:09 -04'00'

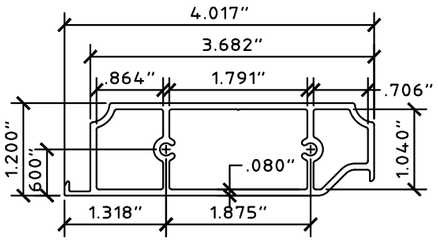

1 MUNTIN
SCALE: HALF SIZE

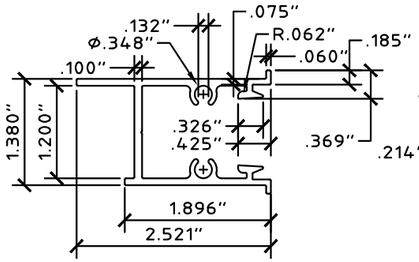

2 JAMB
SCALE: HALF SIZE

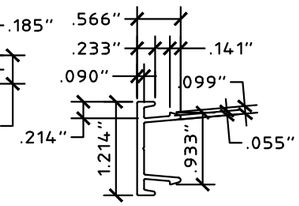

3 JAMB SNAP
SCALE: HALF SIZE

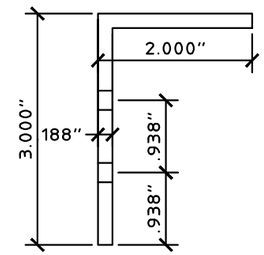

4 4" CENTER CLIP
SCALE: HALF SIZE

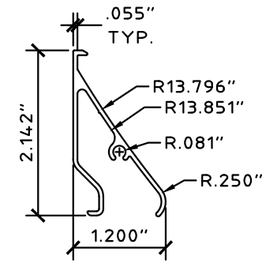

5 COLONIAL BLADE
SCALE: HALF SIZE

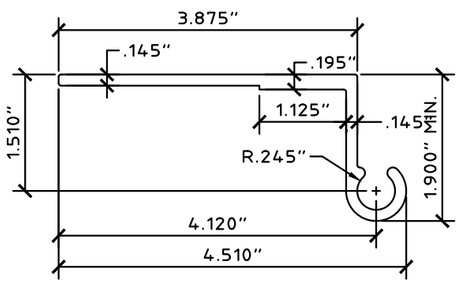

6 WALL HINGE
SCALE: HALF SIZE

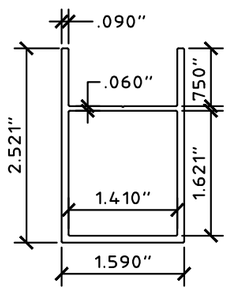

7 HEADER / SILL
SCALE: HALF SIZE

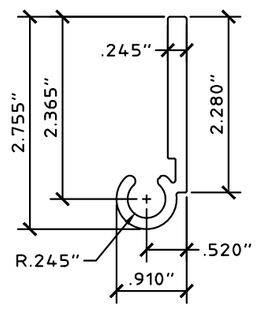

9 FLAT HINGE
SCALE: HALF SIZE

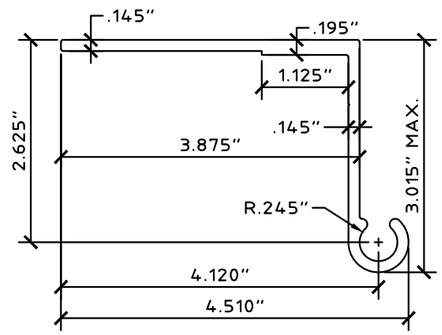

8 BUILD-OUT WALL HINGE
SCALE: HALF SIZE

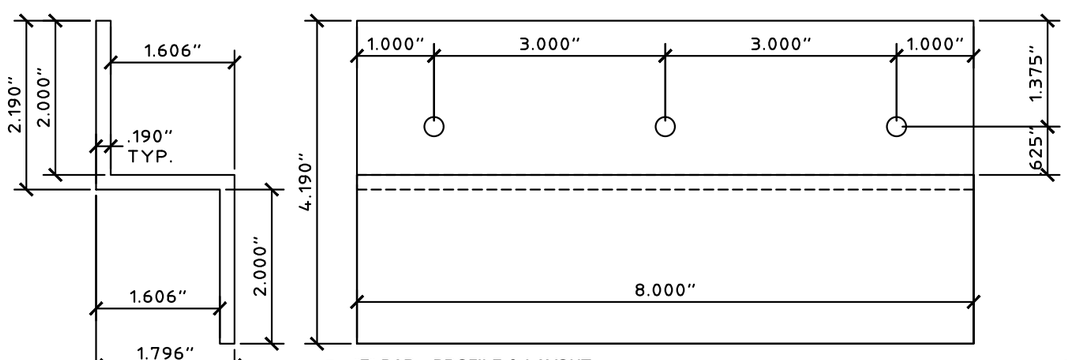

10 "Z" BAR - PROFILE & LAYOUT
SCALE: HALF SIZE

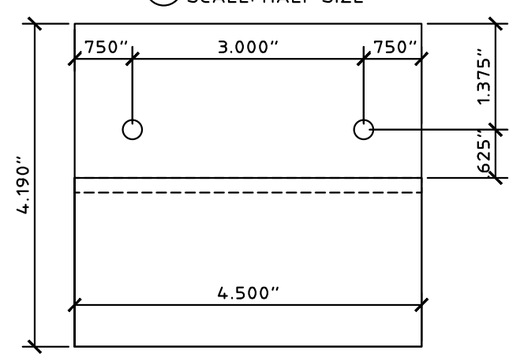

10A 4-1/2" "Z" BAR - PROFILE
SCALE: HALF SIZE

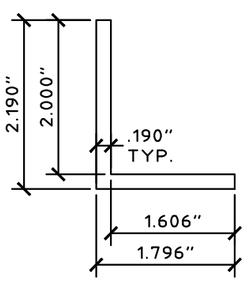

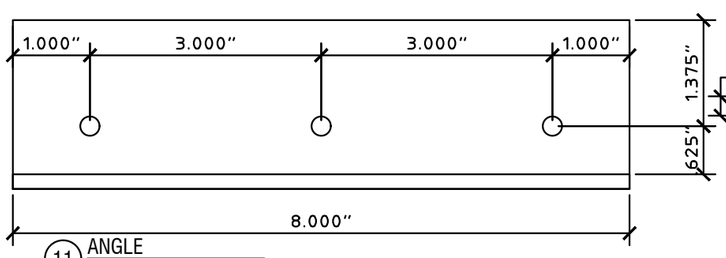

11 ANGLE
SCALE: HALF SIZE

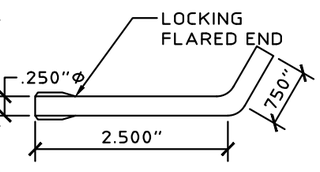

12 L-PIN - 1/4" Ø
SCALE : HALF SIZE

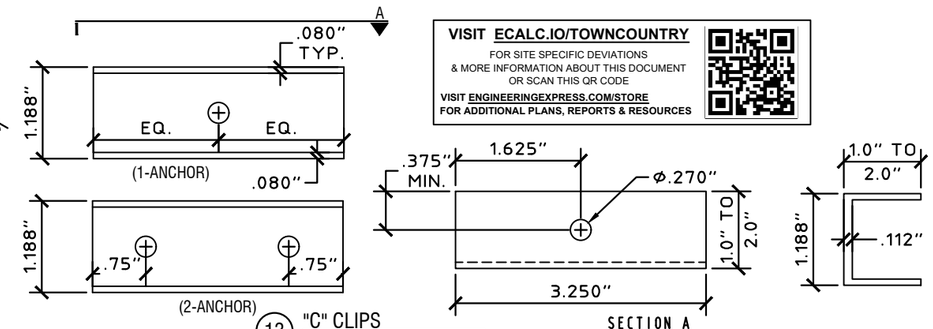

13 "C" CLIPS
SCALE : HALF SIZE

GENERAL NOTES:

1. THESE INSTALLATION INSTRUCTIONS ARE PART OF A PRODUCT APPROVAL EVALUATION AND SHALL ONLY BE USED IN CONJUNCTION WITH THE EVALUATION REPORT SUBMITTED FOR THE SAME PRODUCT APPROVAL.
2. THIS SYSTEM HAS BEEN TESTED AND EVALUATED IN ACCORDANCE WITH THE FLORIDA BUILDING CODE EIGHTH EDITION (2023), FOR USE OUTSIDE THE HIGH VELOCITY HURRICANE ZONE, AND THE INTERNATIONAL BUILDING CODE (IBC) AND INTERNATIONAL RESIDENTIAL CODE (IRC). THIS SYSTEM MEETS MISSILE LEVEL "D" AND INCLUDES WIND WIND ZONE 4 AS DEFINED IN ASTM E1996. SEE EVALUATION REPORT FOR MORE INFORMATION.
3. POSITIVE AND NEGATIVE DESIGN PRESSURES CALCULATED FOR USE WITH THIS SYSTEM SHALL BE DETERMINED PER SEPARATE ENGINEERING IN ACCORDANCE WITH THE GOVERNING CODE. PRESSURE REQUIREMENTS SHALL BE LESS THAN OR EQUAL TO THE POSITIVE OR NEGATIVE DESIGN PRESSURE CAPACITY VALUES LISTED HEREIN FOR ANY ASSEMBLY AS SHOWN.
4. TESTING WAS CONDUCTED IN ACCORDANCE WITH TAS 201/202/203 AND ASTM E1886/E1996/E330.
5. THIS SYSTEM HAS BEEN DESIGNED WITH NO SEPARATION FROM GLAZING REQUIRED FOR WIND ZONES 1-3, IN ACCORDANCE WITH ASTM E1996. IT IS ACCEPTABLE BY CODE UNLESS OPTIONAL CRITERIA IS INDEPENDENTLY ADOPTED BY THE AUTHORITY HAVING JURISDICTION.
6. DESIGN PRESSURES NOTED HEREIN ARE BASED ON MAXIMUM TESTED PRESSURES DIVIDED BY A 1.5 SAFETY FACTOR.
7. NO INCREASE IN ALLOWABLE STRESS HAS BEEN USED IN THE DESIGN OF THESE PRODUCTS. WIND LOAD DURATION FACTOR Cd = 1.6 WAS USED FOR WOOD ANCHOR DESIGN.
8. DETERMINE THE POSITIVE AND NEGATIVE DESIGN LOADS TO USE WHEN REFERENCING THESE DOCUMENTS IN ACCORDANCE WITH THE GOVERNING CODE AND GOVERNING WIND VELOCITY. FOR WIND LOAD CALCULATIONS IN ACCORDANCE WITH ASCE 7, A DIRECTIONALITY FACTOR OF Kd =0.85 SHALL BE USED.
9. THE SYSTEM DETAILED HEREIN IS GENERIC AND DOES NOT PROVIDE INFORMATION FOR A SPECIFIC SITE.
10. PERMIT HOLDER SHALL VERIFY THE ADEQUACY OF THE EXISTING STRUCTURE TO WITHSTAND SUPERIMPOSED LOADS.
11. ANCHORS SHALL BE INSTALLED PER MANUFACTURER RECOMMENDATIONS. MINIMUM EMBEDMENT AND EDGE DISTANCE EXCLUDES STUCCO, FOAM, BRICK, AND OTHER WALL FINISHES.
12. USE OF THESE APPROVAL DOCUMENTS SHALL COMPLY WITH CHAPTER 61G15 OF THE FLORIDA ADMINISTRATIVE CODE.
13. THESE APPROVAL DOCUMENTS ARE SUITABLE TO BE APPLIED BY THE CONTRACTOR PROVIDED THE CONTRACTOR DOES NOT DEVIATE FROM THE CONDITIONS DETAILED HEREIN AND THE CONTRACTOR VERIFIES THAT THE EXISTING STRUCTURE DOES NOT DEVIATE IN EITHER FORM OR MATERIAL FROM THE STRUCTURAL SUBSTRATES DETAILED HEREIN.
14. ANY MODIFICATIONS OR ADDITIONS TO THESE APPROVAL DOCUMENTS WILL VOID THE APPROVAL DOCUMENTS.
15. EACH SHUTTER ASSEMBLY SHALL BE PERMANENTLY LABELED WITH THE SPECIFICATIONS LISTED BY THE FLORIDA DBPR.
16. ALL EXTRUSIONS SHOWN SHALL BE 6063-T6 ALUMINUM ALLOY, U.O.N., WITH A MINIMUM Fy OF 25 K.S.I.
17. ALL BOLTS AND WASHERS (EXCLUDING INSTALLATION) SHALL BE STAINLESS STEEL WITH A MINIMUM TENSILE STRENGTH OF 60 K.S.I., U.O.N. POP RIVETS SHALL BE 1/4"Ø OR 3/16"Ø 5052 ALUM. ALLOY.
18. MAXIMUM ALLOWABLE DESIGN PRESSURE IN CLOSED POSITION PROVIDING WIND LOAD & IMPACT RESISTANCE = **+57.2/-66.2** PSF FOR ALL SHUTTER SYSTEM CONFIGURATIONS SHOWN HEREIN.
19. MAXIMUM ALLOWABLE DESIGN PRESSURE IN OPEN POSITION = +/- 28 PSF.
20. THIS SHUTTER SYSTEM SHALL NOT BE INSTALLED IN ESSENTIAL FACILITIES AS DEFINED IN ASTM E1996.
21. SHUTTER ASSEMBLY MUST BE CLOSED AND SECURED AND SHALL NOT BE LEFT IN THE OPEN POSITION IN THE EVENT OF A WIND STORM EVENT.
22. ALL STEEL IN CONTACT WITH ALUMINUM SHALL BE PAINTED OR PLATED.

VISIT ECALC.IO/TOWNCOUNTRY
FOR SITE SPECIFIC DEVIATIONS & MORE INFORMATION ABOUT THIS DOCUMENT OR SCAN THIS QR CODE
VISIT **ENGINEERINGEXPRESS.COM/STORE** FOR ADDITIONAL PLANS, REPORTS & RESOURCES

FL# 16219.1

ENGINEERING EXPRESS®
POSTAL ADDRESS:
401 W. ATLANTIC AVE R10 BOX 219
DELRAY BEACH, FL 33444
ENGINEERINGEXPRESS.COM

Town & Country INDUSTRIES Wholesale Aluminum and Building Products
400 WEST MCNAB ROAD, FT. LAUDERDALE, FL 33309

COLONIAL SHUTTER
FLORIDA BUILDING CODE EIGHTH EDITION (2023)
FLORIDA STATEWIDE APPROVAL (FSA FL#16219.1

REMARKS	DRWN	CHKD	DATE
FBC 2020 (20-26168)	CCB	RWN	7/01/20
FBC 2023	MLD	CCB	8/21/23

COPYRIGHT ENGINEERING EXPRESS®

23-64831

SCALE: NTS UNLESS NOTED

8/19/2023 12:42 PM MATTHEW c:\users\matthew\engineering express\production - documents\projects\23-\23-64831 multiple products 2023 fbc update fl 16219\work\2023 fbc\23-64831 - fl16219.1 - dwg.dwg

COLBY BENNARDO, PE
PE# 95197 CA# 9885

SPACE RESERVED FOR DIGITAL SEAL INFORMATION

WHEN DIGITALLY SEALED, THIS NOTE SHALL BE FULLY COVERED ON SHEET 1

WHEN PRINTED OR PHYSICALLY SEALED, SEAL OF CERTIFYING ENGINEER, AND DATE OF CERTIFICATION SHALL BE SHOWN TO THE RIGHT.

IN ALL CASES, CERTIFYING ENGINEER AND CERT OF AUTH AS LISTED ON STAMP

COLBY BENNARDO LICENSE No 95197 STATE OF FLORIDA PROFESSIONAL ENGINEER
SIGNED: 08/21/2023

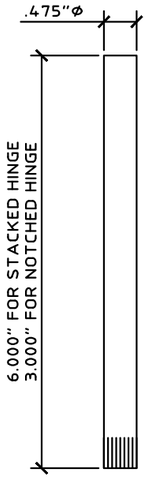

16 ALT. HINGE PIN
SCALE: HALF SIZE

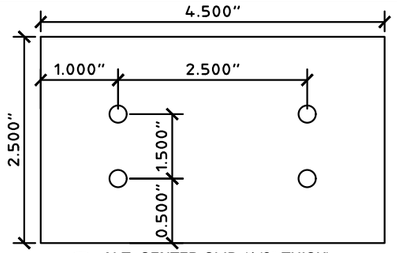

4a ALT. CENTER CLIP (1/8" THICK)
SCALE: HALF SIZE

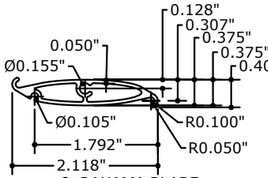

14a 2" BAHAMA BLADE
SCALE: HALF SIZE

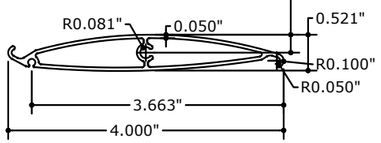

14b 4" BAHAMA BLADE
SCALE: HALF SIZE

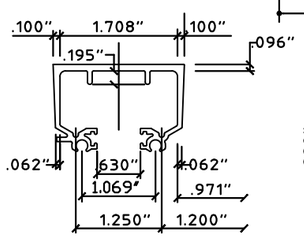

15 PANEL TRACK
SCALE: HALF SIZE

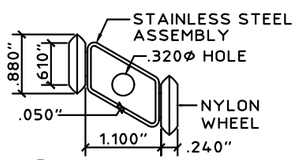

22 ROLLER ASSEMBLY
SCALE: HALF SIZE

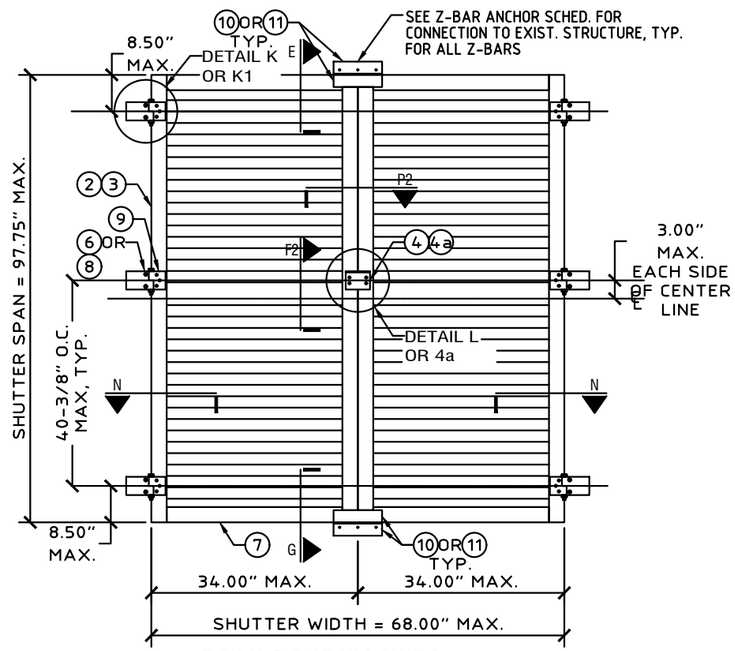

A TYPICAL ELEVATION 2 PANELS
SCALE: 1/2" = 1'-0"

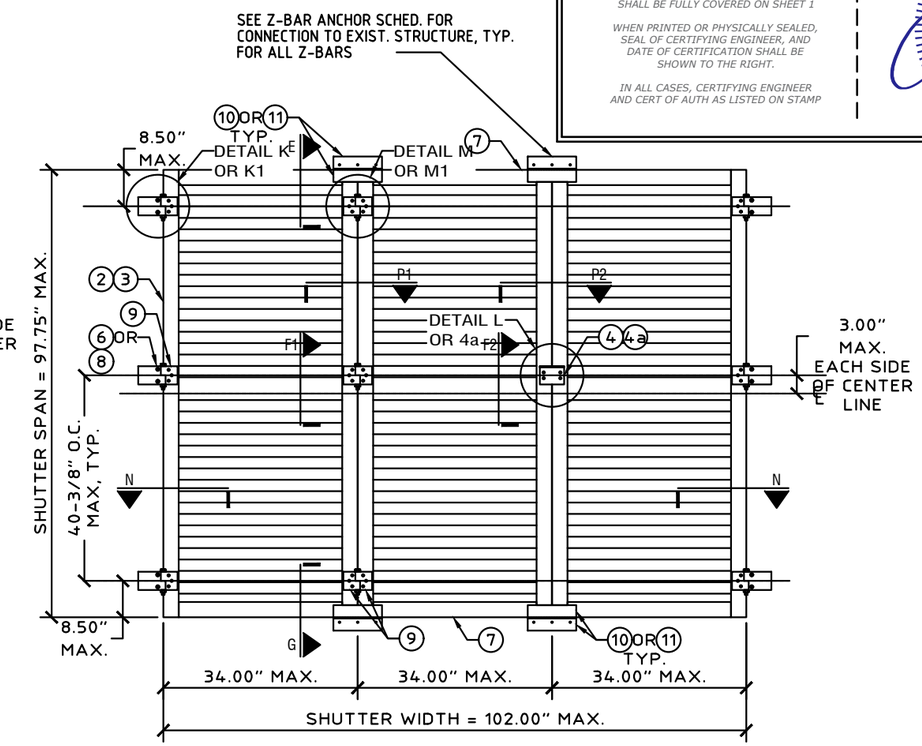

B TYPICAL ELEVATION 3 PANELS
SCALE: 1/2" = 1'-0"

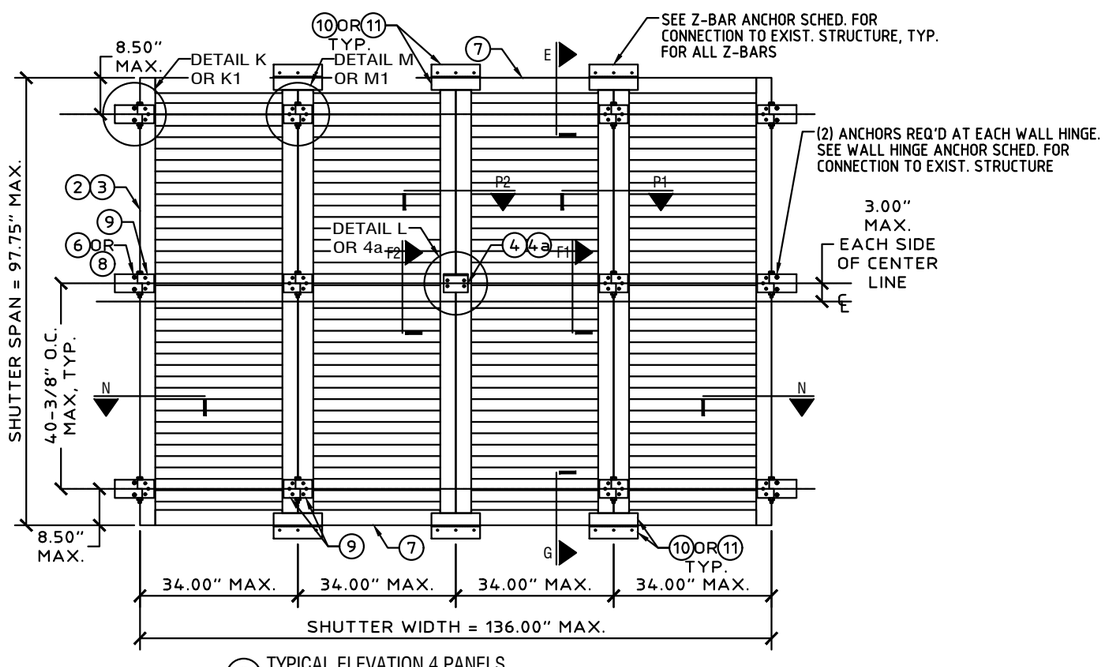

C TYPICAL ELEVATION 4 PANELS
SCALE: 1/2" = 1'-0"

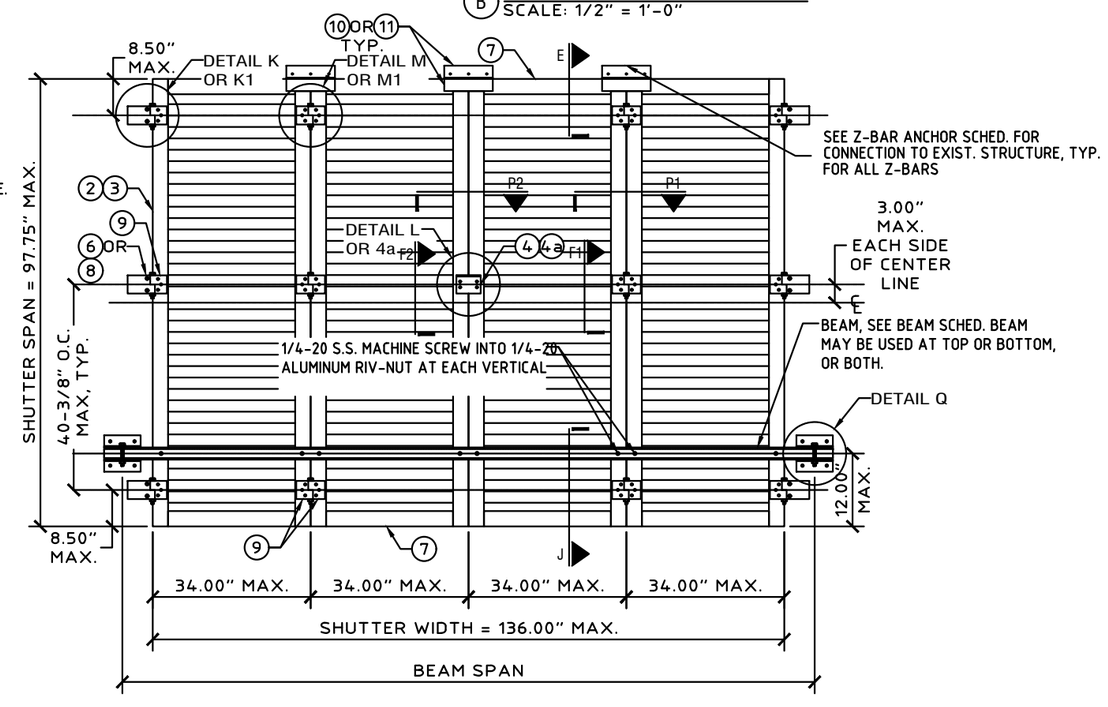

D TYPICAL ELEVATION WITH BEAM (2, 3, OR 4 PANELS)
SCALE: 1/2" = 1'-0"

FL# 16219.1

ENGINEERING EXPRESS®
POSTAL ADDRESS:
401 W. ATLANTIC AVE R10 BOX 219
DELRAY BEACH, FL 33444
ENGINEERINGEXPRESS.COM

Town & Country INDUSTRIES
Wholesale Aluminum and Building Products
A Division of AGC Supply Co., Inc.
400 WEST MCNAB ROAD, FT. LAUDERDALE, FL 33309

COLONIAL SHUTTER
FLORIDA BUILDING CODE EIGHTH EDITION (2023)
FLORIDA STATEWIDE APPROVAL (FSA FL#16219.1

REMARKS	DRWN	CHKD	DATE
FBC 2020 (20-26168)	CCB	RWN	7/01/20
FBC 2023	MLD	CCB	8/21/23

COPYRIGHT ENGINEERING EXPRESS®

23-64831

SCALE: NTS UNLESS NOTED

2 OF 9

8/19/2023 12:43 PM MATTHEW c:\users\matthew\engineering express\production - documents\projects\23-\23-64831 multiple products 2023 fbc update fl 16219\work\2023 fbc\23-64831 - fl16219.1 - dwg.dwg

8/19/2023 12:43 PM MATTHEW c:\users\matthew\engineering express\production - documents\projects\23-\23-64831 multiple products 2023 fbc update fl 16219\work\2023 fbc\23-64831 - fl16219.1 - dwg.dwg

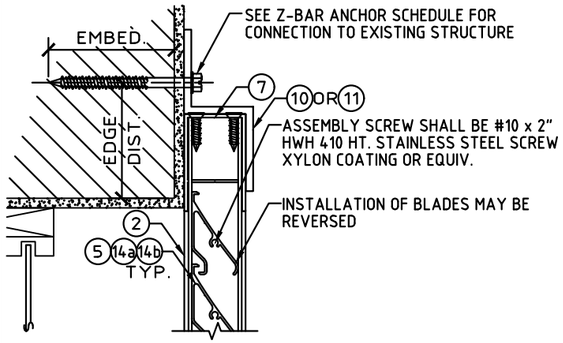

E1 TYPICAL TOP WALL MOUNT
SCALE: 3" = 1'-0"

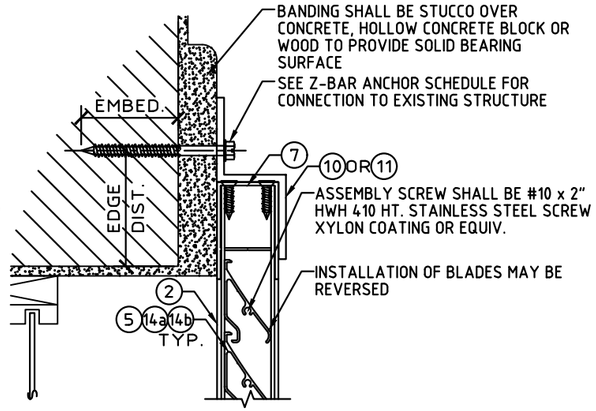

E2 ALTERNATE TOP WALL MOUNT
SCALE: 3" = 1'-0"

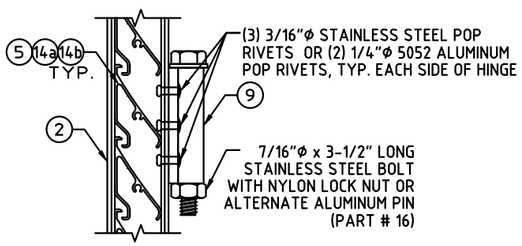

F1 TYPICAL PANEL HINGE CONNECTION
SCALE: 3" = 1'-0"

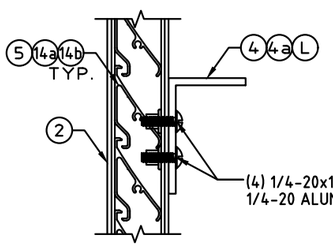

NOTE: BLADES MAY BE COLONIAL BLADES OR ARTICULATING BLADES. COLONIAL BLADES SHOWN ON THIS PAGE. SEE SHEET 4 FOR TYPICAL ARTICULATING BLADE DETAIL.

F2 TYPICAL CENTER CLIP CONNECTION
SCALE: 3" = 1'-0"

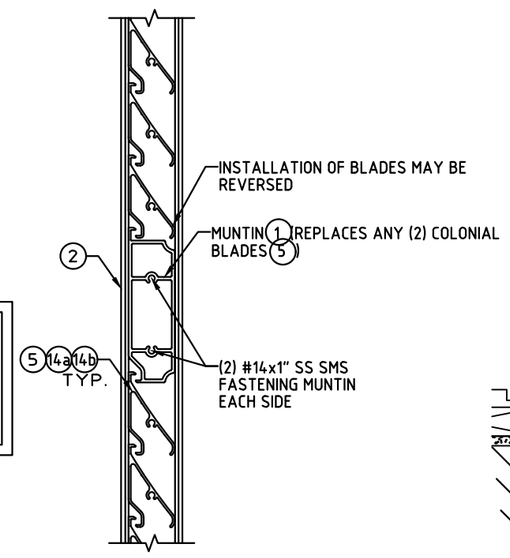

H ALTERNATE BLADE
SCALE: 3" = 1'-0"

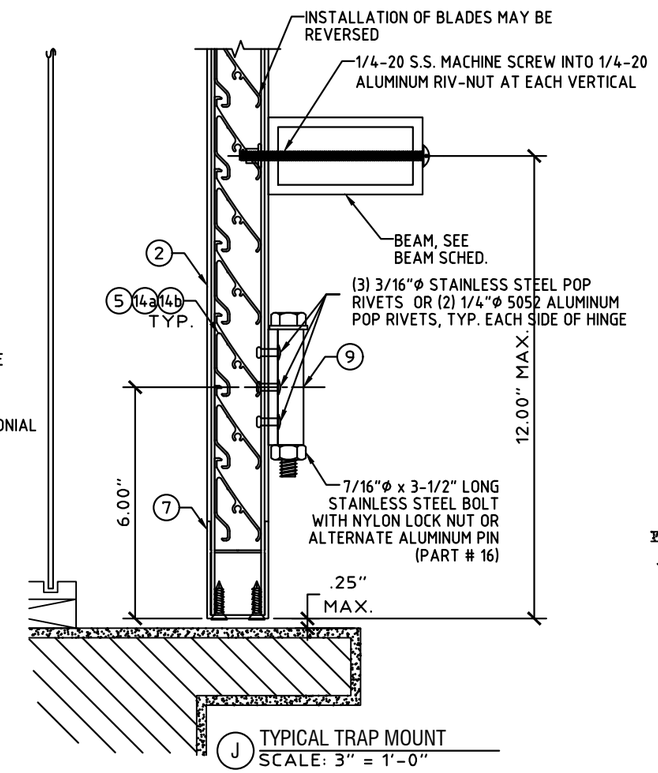

J TYPICAL TRAP MOUNT
SCALE: 3" = 1'-0"

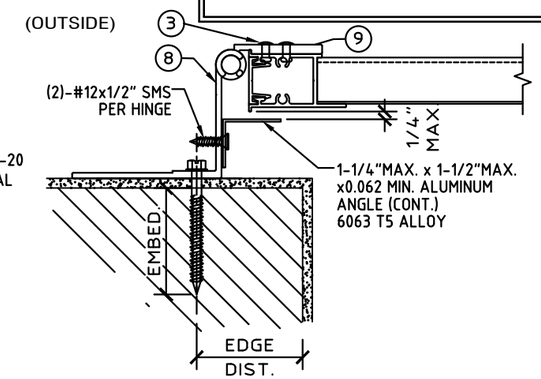

K SIDE CLOSURE DETAIL
SCALE: 3" = 1'-0"

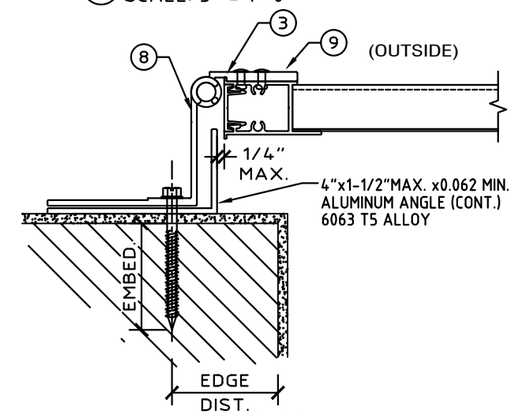

Ka ALTERNATE SIDE CLOSURE DETAIL
SCALE: 3" = 1'-0"

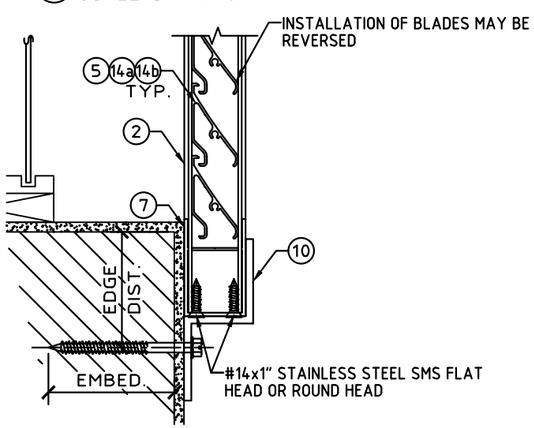

G1 TYPICAL BOTTOM WALL MOUNT
SCALE: 3" = 1'-0"

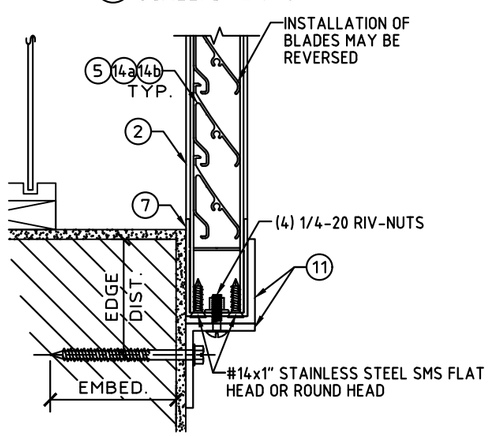

G2 ALTERNATE WALL MOUNT
SCALE: 3" = 1'-0"

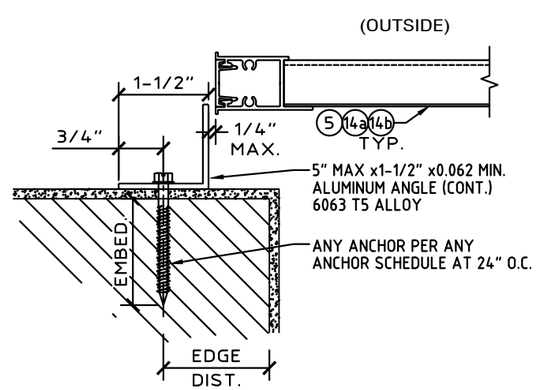

Kb SLIDING PANEL SIDE CLOSURE DETAIL
N.T.S.

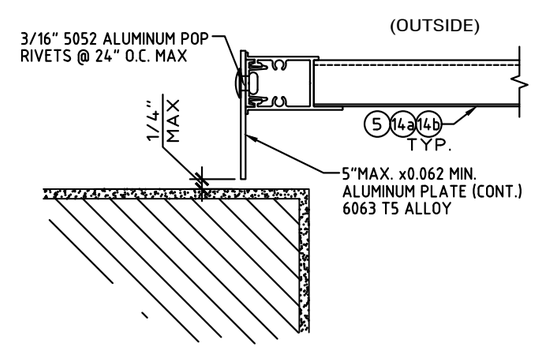

Kc SLIDING PANEL SIDE ALTERNATE CLOSURE DETAIL
N.T.S.

COLBY BENNARDO, PE
PE# 95197 CA# 9885

3

SPACE RESERVED FOR DIGITAL SEAL INFORMATION

WHEN DIGITALLY SEALED, THIS NOTE SHALL BE FULLY COVERED ON SHEET 1

WHEN PRINTED OR PHYSICALLY SEALED, SEAL OF CERTIFYING ENGINEER, AND DATE OF CERTIFICATION SHALL BE SHOWN TO THE RIGHT.

IN ALL CASES, CERTIFYING ENGINEER AND CERT OF AUTH AS LISTED ON STAMP

COLBY BENNARDO LICENSE No 95197 STATE OF FLORIDA PROFESSIONAL ENGINEER
SIGNED: 08/21/2023

FL# 16219.1

ENGINEERING EXPRESS®
POSTAL ADDRESS:
401 W. ATLANTIC AVE R10 BOX 219
DELRAY BEACH, FL 33444
ENGINEERINGEXPRESS.COM

Town&Country INDUSTRIES Wholesale Aluminum and Building Products
400 WEST MCNAB ROAD, FT. LAUDERDALE, FL 33309

COLONIAL SHUTTER
FLORIDA BUILDING CODE EIGHTH EDITION (2023)
FLORIDA STATEWIDE APPROVAL (FSA FL#16219.1

REMARKS	DRWN	CHKD	DATE
FBC 2020 (20-26168)	CCB	RWN	7/01/20
FBC 2023	MLD	CCB	8/21/23

COPYRIGHT ENGINEERING EXPRESS®

23-64831

SCALE: NTS UNLESS NOTED

8/19/2023 12:43 PM MATTHEW c:\users\matthew\engineering express\production - documents\projects\23-\23-64831 multiple products 2023 fbc update fl 16219\work\2023 fbc\23-64831 - fl16219.1 - dwg.dwg

COLBY BENNARDO, PE
PE# 95197 CA# 9885

SPACE RESERVED FOR DIGITAL SEAL INFORMATION

WHEN DIGITALLY SEALED, THIS NOTE SHALL BE FULLY COVERED ON SHEET 1

WHEN PRINTED OR PHYSICALLY SEALED, SEAL OF CERTIFYING ENGINEER, AND DATE OF CERTIFICATION SHALL BE SHOWN TO THE RIGHT.

IN ALL CASES, CERTIFYING ENGINEER AND CERT OF AUTH AS LISTED ON STAMP

COLBY BENNARDO LICENSE No 95197 STATE OF FLORIDA PROFESSIONAL ENGINEER
SIGNED: 08/21/2023

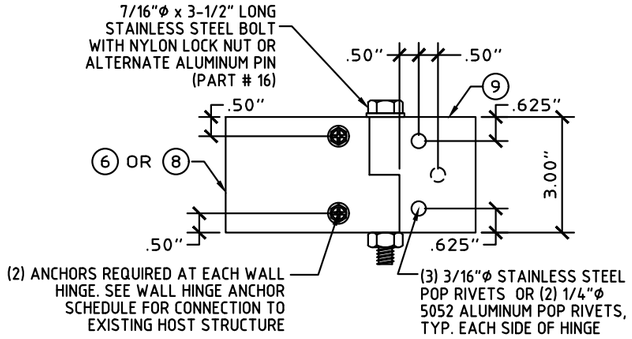

K TYPICAL WALL HINGE
SCALE: 3" = 1'-0"

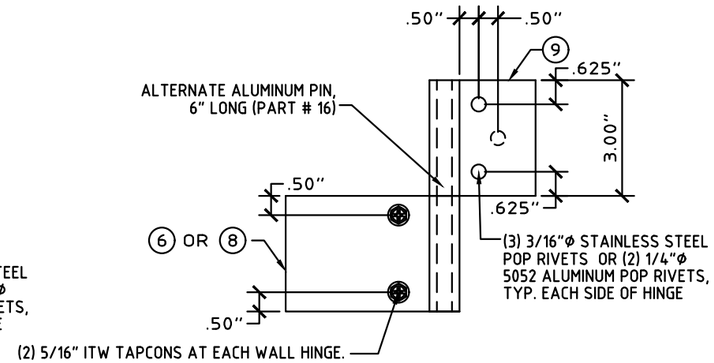

K1 ALTERNATE STACKED WALL HINGE
SCALE: 3" = 1'-0"

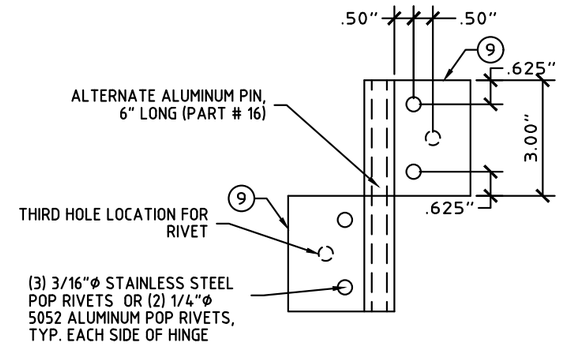

M1 ALTERNATE STACKED PANEL HINGE
SCALE: 3" = 1'-0"

WALL HINGE ANCHOR SCHEDULE:

TO 3192 PSI MIN. CONCRETE:
- 1/4" ITW SS TAPCON W/ 1¾" MIN. EMBEDMENT AND 2-1/2" MIN. EDGE DISTANCE.
- 5/16" ITW TAPCON XL W/ 1-3/4" MIN. EMBEDMENT AND 2-1/2" MIN. EDGE DISTANCE.

TO GROUT-FILLED CONCRETE BLOCK:
- 1/4" DEWALT ULTRACON W/ 2-1/4" MIN. EMBEDMENT AND 2-1/2" MIN. EDGE DISTANCE.
- 5/16" ITW TAPCON XL W/ 1-3/4" MIN. EMBEDMENT AND 4" MIN. EDGE DISTANCE.

TO G=0.42 MIN. WOOD HOST STRUCTURE:
- 1/4" LAG SCREWS WITH 1-1/2" MIN. THREAD PENETRATION AND 3/4" MIN. EDGE DISTANCE.
- #14 WOOD SCREW OR SMS W/ 1-1/2" MIN. THREAD PENETRATION AND 3/4" MIN. EDGE DISTANCE.

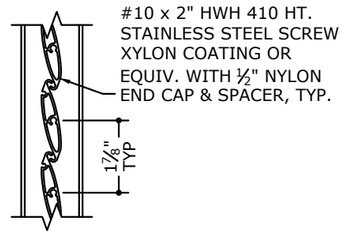

BH1 TYPICAL 2" ARTICULATING LOUVER ATTACHMENT
SCALE: N.T.S.

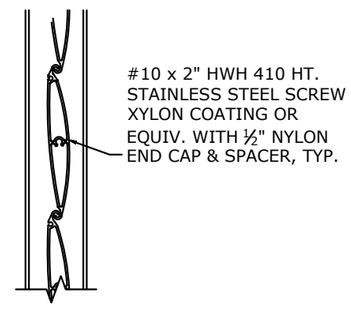

BH2 TYPICAL 4" ARTICULATING LOUVER ATTACHMENT
SCALE: N.T.S.

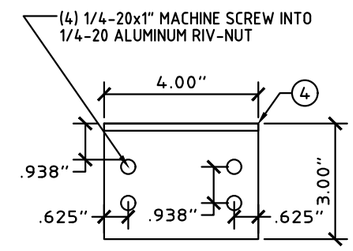

L TYPICAL CENTER CLIP
SCALE: 3" = 1'-0"

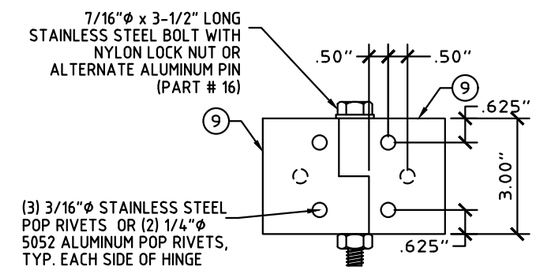

M TYPICAL PANEL HINGE
SCALE: 3" = 1'-0"

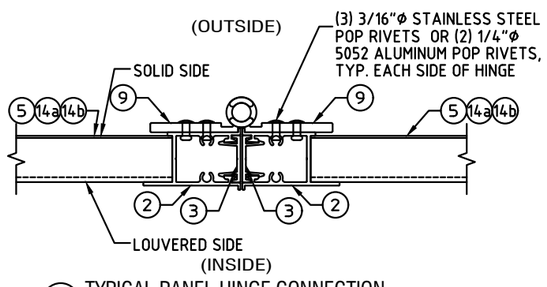

P1 TYPICAL PANEL HINGE CONNECTION
SCALE: 3" = 1'-0"

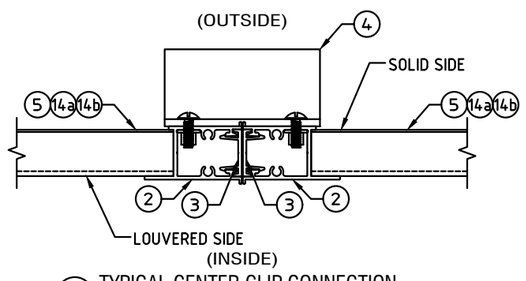

P2 TYPICAL CENTER CLIP CONNECTION
SCALE: 3" = 1'-0"

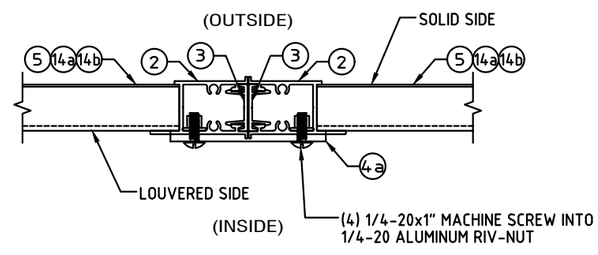

P2 ALTERNATE CENTER CLIP CONNECTION
SCALE: 3" = 1'-0"

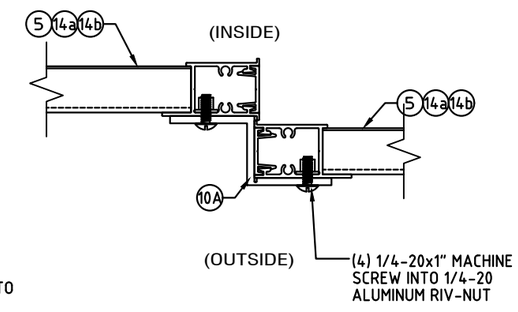

L1 SLIDING PANEL OFFSET CLIP
N.T.S.

FL# 16219.1

ENGINEERING EXPRESS®
POSTAL ADDRESS:
401 W. ATLANTIC AVE R10 BOX 219
DELRAY BEACH, FL 33444
ENGINEERINGEXPRESS.COM

Town & Country INDUSTRIES Wholesale Aluminum and Building Products
400 WEST MCNAB ROAD, FT. LAUDERDALE, FL 33309

COLONIAL SHUTTER
FLORIDA BUILDING CODE EIGHTH EDITION (2023)
FLORIDA STATEWIDE APPROVAL (FSA FL#16219.1

REMARKS	DRWN	CHKD	DATE
FBC 2020 (20-26168)	CCB	RWN	7/01/20
FBC 2023	MLD	CCB	8/21/23
-	-	-	-
-	-	-	-
-	-	-	-

COPYRIGHT ENGINEERING EXPRESS®

23-64831

SCALE: NTS UNLESS NOTED

COLBY BENNARDO, PE
PE# 95197 CA# 9885

SPACE RESERVED FOR DIGITAL SEAL INFORMATION

WHEN DIGITALLY SEALED, THIS NOTE SHALL BE FULLY COVERED ON SHEET 1

WHEN PRINTED OR PHYSICALLY SEALED, SEAL OF CERTIFYING ENGINEER, AND DATE OF CERTIFICATION SHALL BE SHOWN TO THE RIGHT.

IN ALL CASES, CERTIFYING ENGINEER AND CERT OF AUTH AS LISTED ON STAMP

COLBY BENNARDO LICENSE No 95197 STATE OF FLORIDA PROFESSIONAL ENGINEER
SIGNED: 08/21/2023

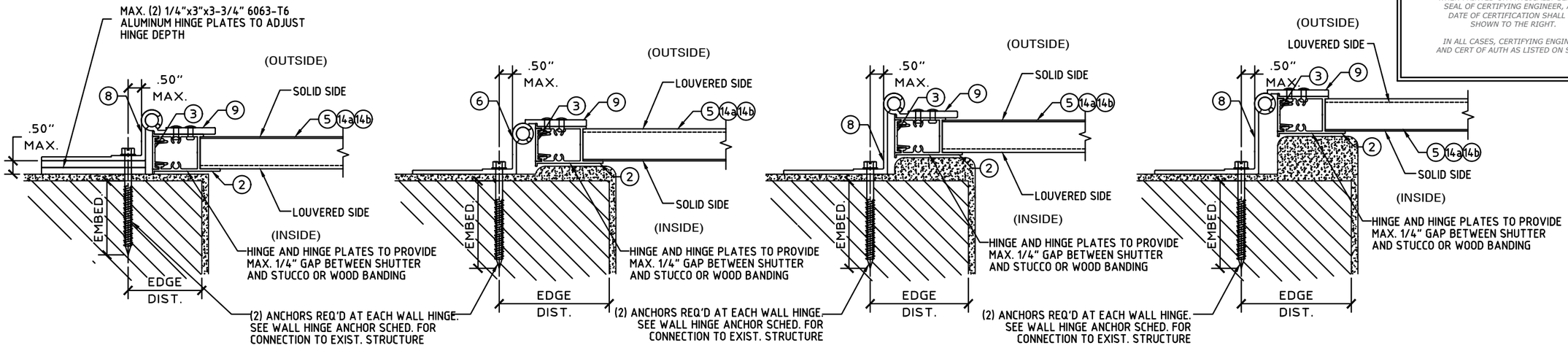

N1 TYPICAL WALL HINGE CONNECTION
SCALE: 3" = 1'-0"

N2 ALTERNATE WALL HINGE CONNECTION
SCALE: 3" = 1'-0"

N3 ALTERNATE WALL HINGE CONNECTION
SCALE: 3" = 1'-0"

N4 ALTERNATE WALL HINGE CONNECTION
SCALE: 3" = 1'-0"

BEAM SCHEDULE

BEAM SIZE	SHUTTER SPAN	BEAM SPAN	WALL BRACKET ANCHOR TYPES		
			CONCRETE (3323 PSI MIN)	HOLLOW CONCRETE BLOCK	WOOD (G=0.42 MIN.)
2"x3"x1/8" (6063-T6)	8'-1.75"	6'-0"	A, B, C	A, B, C	B, C
	6'-8"	6'-8"	A, B, C	A, B, C	B, C
	5'-10"	7'-0"	A, B, C	A, B, C	B, C
2"x4"x1/8" (6063-T6)	8'-1.75"	7'-5"	A, B, C	A, C	B, C
	6'-8"	8'-1"	A, B, C	A, C	B, C
	5'-10"	8'-6"	A, B, C	A, B, C	B, C
2"x5"x1/8" (6063-T6)	8'-1.75"	8'-8"	A, B, C	A, C	B, C
	6'-8"	9'-5"	A, B, C	A, C	B, C
	5'-10"	9'-11"	A, B, C	A, C	B, C
2"x4"x1/4" (6061-T6)	8'-1.75"	11'-3"	A, B, C	C	B, C
	6'-8"	12'-2"	A, B, C	C	B, C
	5'-10"	12'-6"	A, B, C	A, C	B, C

ANCHOR TYPES FOR USE WITH BEAM SCHEDULE, (4) ANCHORS PER BEAM END

A. 1/4" ALL POINTS SOLID-SET ANCHORS
FOR CONCRETE: 7/8" MIN. EMBEDMENT, 3" MIN. EDGE DISTANCE, AND 3" MIN. SPACING.
FOR HOLLOW CONCRETE BLOCK: 7/8" MIN. EMBEDMENT, 3" MIN. EDGE DISTANCE, AND 3" MIN. SPACING.

B. 1/4" EYEWALL ARMOR MALE BOLT OR DEWALT MALE/FEMALE PANELMATE
FOR CONCRETE: 2" MIN. EMBEDMENT, 3" MIN. EDGE DISTANCE, AND 3" MIN. SPACING.
FOR HOLLOW CONCRETE BLOCK: 1-1/4" MIN. EMBEDMENT, 3" MIN. EDGE DISTANCE, AND 3" MIN. SPACING.
FOR WOOD: 1-7/8" MIN. EMBEDMENT. 3/4" MIN. EDGE DISTANCE, 1.5" MIN. SPACING.

C. 1/4" ITW TAPCON SG
FOR CONCRETE: 1-3/4" MIN. EMBEDMENT, 2-1/2" MIN. EDGE DISTANCE, 3" MIN. SPACING.
FOR HOLLOW CONCRETE BLOCK: 1-1/4" MIN. EMBEDMENT, 2-1/2" MIN. EDGE DISTANCE, 3" MIN. SPACING.
FOR WOOD: 1-1/2" MIN. EMBEDMENT, 3/4" MIN. EDGE DISTANCE, 1.5" MIN. SPACING.

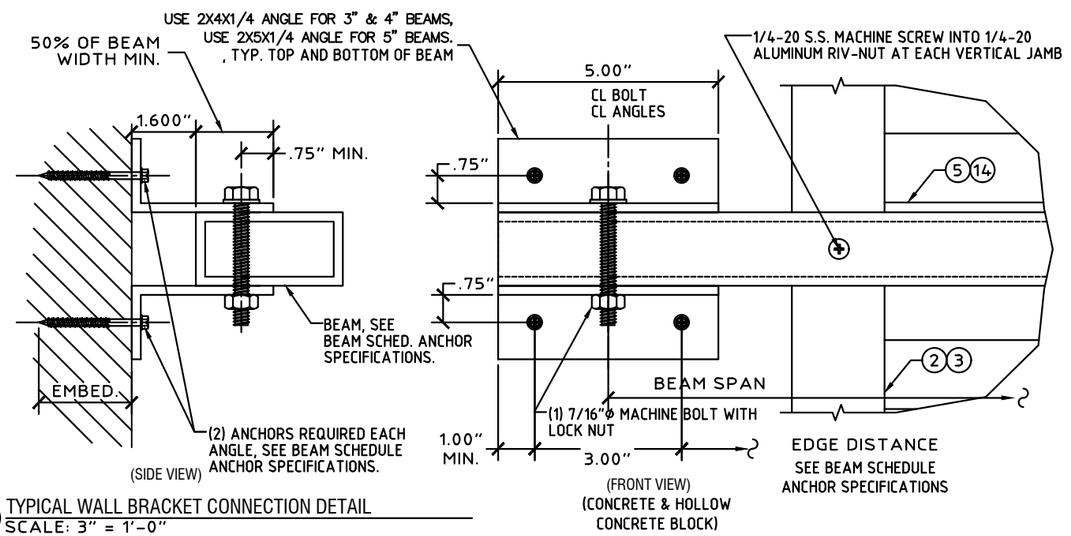

Q TYPICAL WALL BRACKET CONNECTION DETAIL
SCALE: 3" = 1'-0"

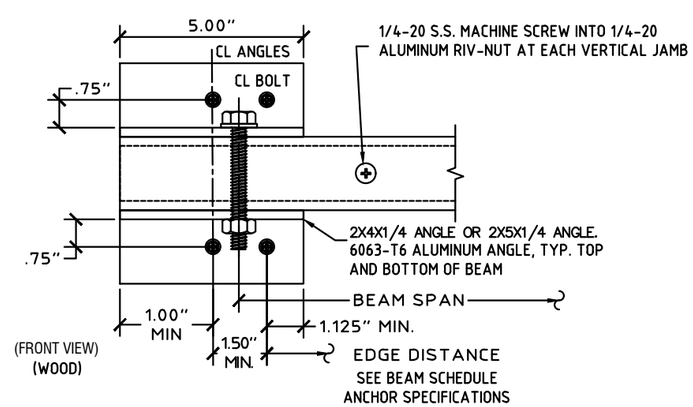

FL# 16219.1

ENGINEERING EXPRESS®
POSTAL ADDRESS:
401 W. ATLANTIC AVE R10 BOX 219
DELRAY BEACH, FL 33444
ENGINEERINGEXPRESS.COM

Town&Country INDUSTRIES Wholesale Aluminum and Building Products
400 WEST MCNAB ROAD, FT. LAUDERDALE, FL 33309

COLONIAL SHUTTER
FLORIDA BUILDING CODE EIGHTH EDITION (2023)
FLORIDA STATEWIDE APPROVAL (FSA FL#16219.1

REMARKS	DRWN	CHKD	DATE
FBC 2020 (20-26168)	CCB	RWN	7/01/20
FBC 2023	MLD	CCB	8/21/23

COPYRIGHT ENGINEERING EXPRESS®

23-64831

SCALE: NTS UNLESS NOTED

8/19/2023 12:53 PM MATTHEW c:\users\matthew\engineering express\production - documents\projects\23-\23-64831 multiple products 2023 fbc update fl 16219\work\2023 fbc\23-64831 - fl16219.1 - dwg.dwg

COLBY BENNARDO, PE
PE# 95197 CA# 9885

SPACE RESERVED FOR DIGITAL SEAL INFORMATION

WHEN DIGITALLY SEALED, THIS NOTE SHALL BE FULLY COVERED ON SHEET 1

WHEN PRINTED OR PHYSICALLY SEALED, SEAL OF CERTIFYING ENGINEER, AND DATE OF CERTIFICATION SHALL BE SHOWN TO THE RIGHT.

IN ALL CASES, CERTIFYING ENGINEER AND CERT OF AUTH AS LISTED ON STAMP

COLBY BENNARDO LICENSE No 95197 STATE OF FLORIDA PROFESSIONAL ENGINEER
SIGNED: 08/21/2023

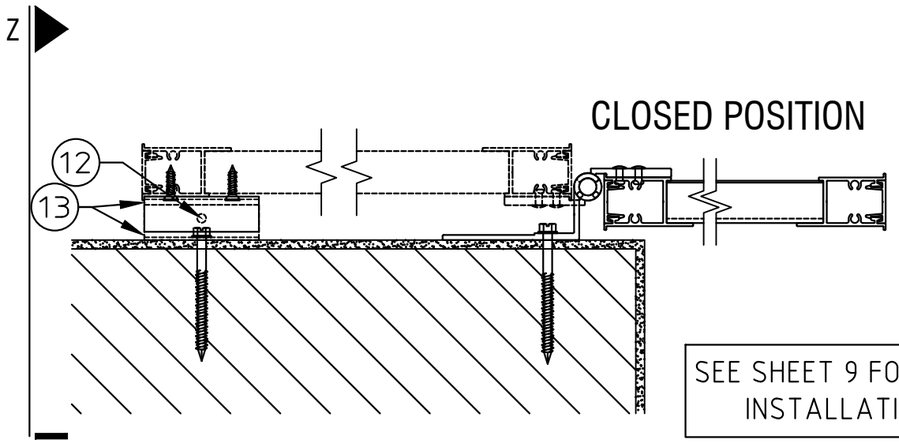

SEE SHEET 9 FOR ALL PLAN VIEW INSTALLATION POSITIONS

R PLAN VIEW 1
SCALE: 1-1/2" = 1'-0"

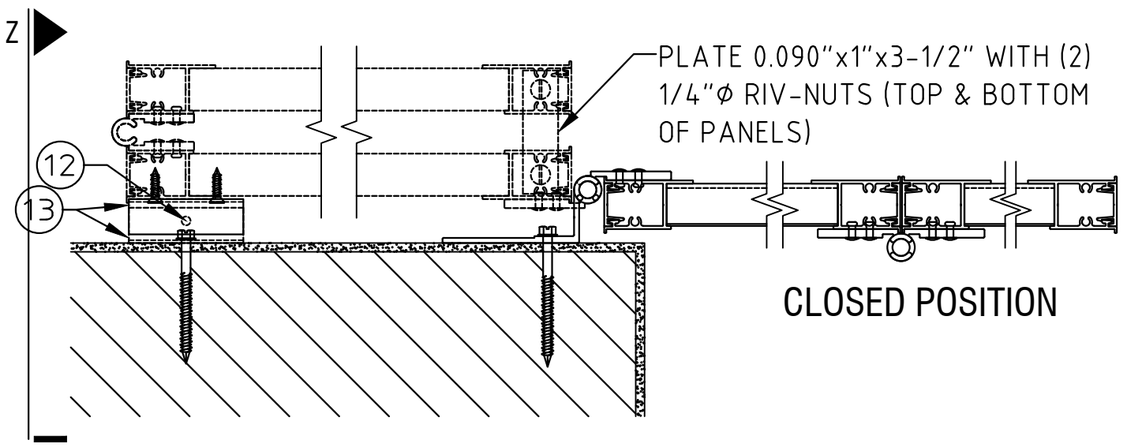

S PLAN VIEW 2
SCALE: 1-1/2" = 1'-0"

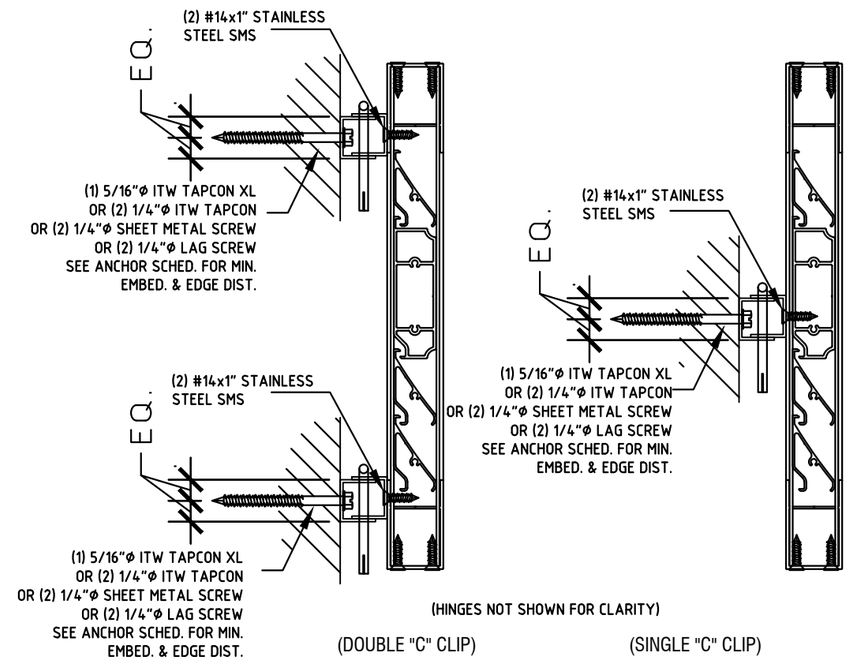

NOTE:
CLIPS REQ'D TOP & BOTTOM FOR SPANS > 69". ONE CLIP REQ'D AT MID-SPAN (±3") FOR SPANS ≤ 69".

X1 OPEN POSITION LOCK W/ "C" CLIP
SCALE: 3" = 1'-0"

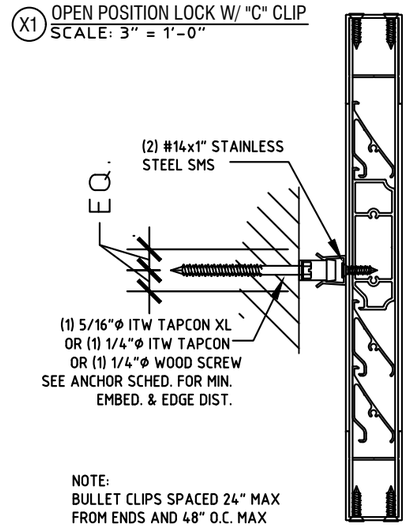

NOTE:
BULLET CLIPS SPACED 24" MAX FROM ENDS AND 48" O.C. MAX

X2 OPEN POSITION LOCK W/ BULLET CLIP
SCALE: 3" = 1'-0"

Z-BAR ANCHOR SCHEDULE:

TO 3350 PSI MIN. CONCRETE:
- 1/4" EYEWALL ARMOR MALE BOLT OR DEWALT MALE/FEMALE PANELMATE W/ 2" MIN. EMBEDMENT AND 2-1/2" MIN. EDGE DISTANCE.
- 1/4" ITW TAPCON SG W/ 1-3/4" MIN. EMBEDMENT AND 2-1/2" MIN. EDGE DISTANCE.
- 1/4" ALL-POINTS SOLID SET W/ 7/8" MIN. EMBEDMENT AND 2" MIN. EDGE DISTANCE.

TO HOLLOW CONCRETE BLOCK:
- 1/4" EYEWALL ARMOR MALE BOLT OR DEWALT MALE/FEMALE PANELMATE W/ 1-1/4" MIN. EMBEDMENT AND 2" MIN. EDGE DISTANCE.
- 1/4" ITW TAPCON SG W/ 1-1/4" MIN. EMBEDMENT AND 2-1/2" MIN. EDGE DISTANCE.
- 1/4" ALL-POINTS SOLID SET W/ 7/8" MIN. EMBEDMENT AND 2" MIN. EDGE DISTANCE

TO G=0.42 MIN. WOOD HOST STRUCTURE:
- 1/4" HANGER BOLT WITH 1-1/2" MIN. THREAD PENETRATION AND 3/4" MIN. EDGE DISTANCE.
- 1/4" EYEWALL ARMOR MALE BOLT OR DEWALT MALE/FEMALE PANELMATE W/ 1-7/8" MIN. EMBEDMENT AND 3/4" MIN. EDGE DISTANCE.
- 1/4" ITW TAPCON SG W/ 1-1/2" MIN. EMBEDMENT AND 3/4" MIN. EDGE DISTANCE.

NOTE: USE (3) ANCHORS PER 8" Z BAR AND (2) PER 4.5" Z BAR

OPEN POSITION LOCK ANCHOR SCHEDULE:

WITH "C" CLIPS OR DOUBLE "C" CLIPS:

TO 2899 PSI MIN. CONCRETE:
- (1) 5/16" ITW TAPCON XL W/ 1-3/4" MIN. EMBEDMENT AND 2" MIN. EDGE DISTANCE.

TO 3192 PSI MIN. CONCRETE:
- (2) 1/4" ITW SS TAPCON W/ 1-3/4" MIN. EMBEDMENT AND 1" MIN. EDGE DISTANCE.

TO HOLLOW CONCRETE BLOCK:
- (1) 5/16" ITW TAPCON XL W/ 1-3/4" MIN. EMBEDMENT AND 4" MIN. EDGE DISTANCE.

TO G=0.42 MIN. WOOD HOST STRUCTURE:
- (2) 1/4" WOOD SCREWS OR SHEET METAL SCREWS W/ 1-3/4" MIN. THREAD PENETRATION AND 3/4" MIN. EDGE DISTANCE.
- (2) 1/4" LAG SCREWS W/ 1-1/2" MIN. THREAD PENETRATION AND 3/4" MIN. EDGE DISTANCE.

WITH BULLET CLIPS:

TO 3192 PSI MIN. CONCRETE:
- (1) 1/4" ITW SS TAPCON W/ 1-3/4" MIN. EMBEDMENT AND 2-1/2" MIN. EDGE DISTANCE.

TO HOLLOW CONCRETE BLOCK:
- (1) 5/16" ITW TAPCON XL W/ 1-3/4" MIN. EMBEDMENT AND 4" MIN. EDGE DISTANCE.

TO G=0.42 MIN. WOOD HOST STRUCTURE:
- (1) 1/4" WOOD SCREWS OR SHEET METAL SCREWS W/ 1-3/4" MIN. THREAD PENETRATION AND 3/4" MIN. EDGE DISTANCE.

FL# 16219.1

ENGINEERING EXPRESS®
POSTAL ADDRESS:
401 W. ATLANTIC AVE R10 BOX 219
DELRAY BEACH, FL 33444
ENGINEERINGEXPRESS.COM

Town&Country INDUSTRIES Wholesale Aluminum and Building Products
400 WEST MCNAB ROAD, FT. LAUDERDALE, FL 33309

COLONIAL SHUTTER
FLORIDA BUILDING CODE EIGHTH EDITION (2023)
FLORIDA STATEWIDE APPROVAL (FSA FL#16219.1

REMARKS	DRWN	CHKD	DATE
FBC 2020 (20-26168)	CCB	RWN	7/01/20
FBC 2023	MLD	CCB	8/21/23

COPYRIGHT ENGINEERING EXPRESS®

23-64831

SCALE: NTS UNLESS NOTED

8/19/2023 12:43 PM MATTHEW c:\users\matthew\engineering express\production - documents\projects\23-\23-64831 multiple products 2023 fbc update fl 16219\work\2023 fbc\23-64831 - fl16219.1 - dwg.dwg

COLBY BENNARDO, PE
PE# 95197 CA# 9885

SPACE RESERVED FOR DIGITAL SEAL INFORMATION

WHEN DIGITALLY SEALED, THIS NOTE SHALL BE FULLY COVERED ON SHEET 1

WHEN PRINTED OR PHYSICALLY SEALED, SEAL OF CERTIFYING ENGINEER, AND DATE OF CERTIFICATION SHALL BE SHOWN TO THE RIGHT.

IN ALL CASES, CERTIFYING ENGINEER AND CERT OF AUTH AS LISTED ON STAMP

COLBY BENNARDO LICENSE No 95197 STATE OF FLORIDA PROFESSIONAL ENGINEER
SIGNED: 08/21/2023

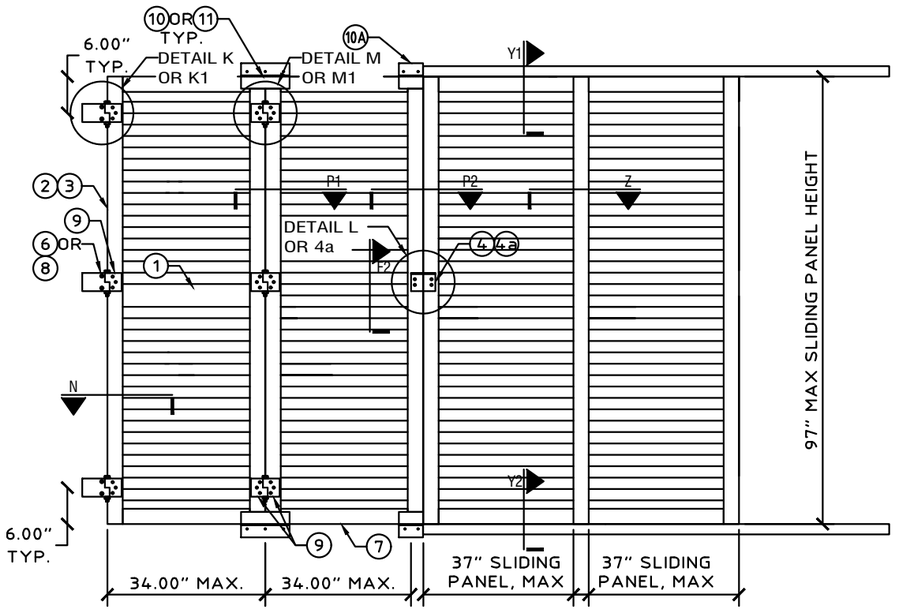

X1 ELEVATION: 2 HINGED AND 2 SLIDING PANELS
SCALE: N.T.S.

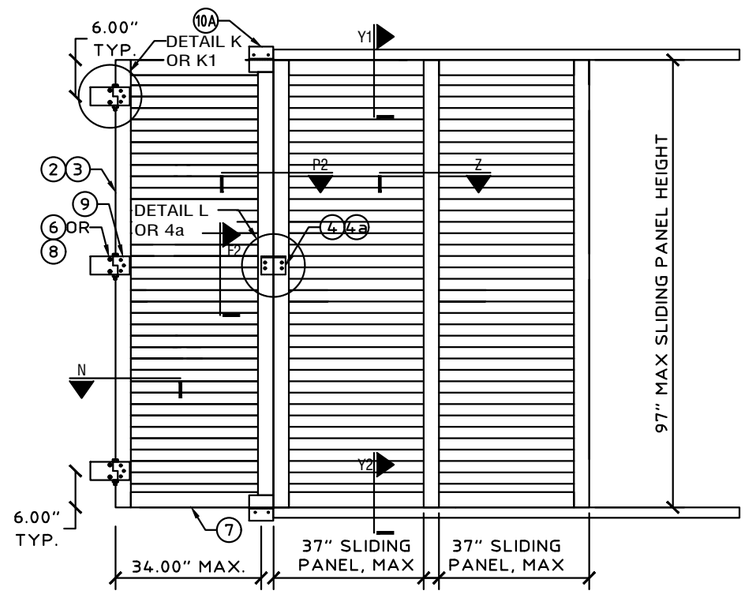

X2 ELEVATION: 1 HINGED AND 2 SLIDING PANELS
SCALE: N.T.S.

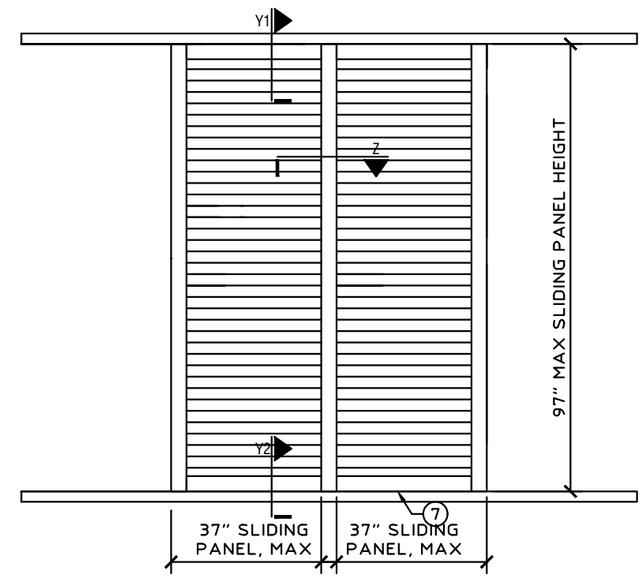

X5 ELEVATION: 2 SLIDING PANELS
SCALE: N.T.S.

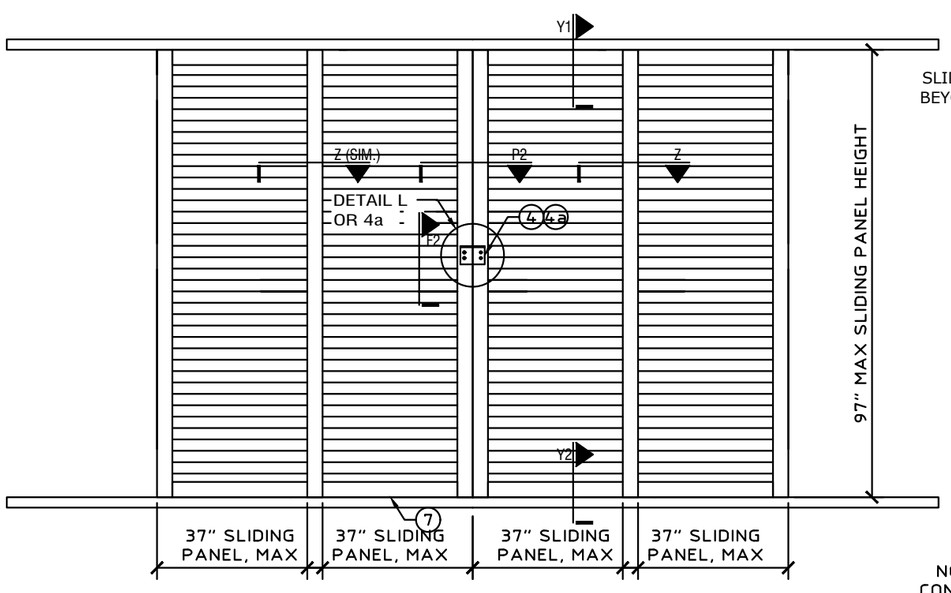

X3 ELEVATION: 4 SLIDING PANELS
SCALE: N.T.S.

SLIDING PANEL TRACKS EXTEND BEYOND FOR SHUTTER STORAGE IN NON-STRUCTURAL OPEN POSITION, TYPICAL.

NOTE: SLIDING PANEL CONSTRUCTION SAME AS HINGED PANELS.

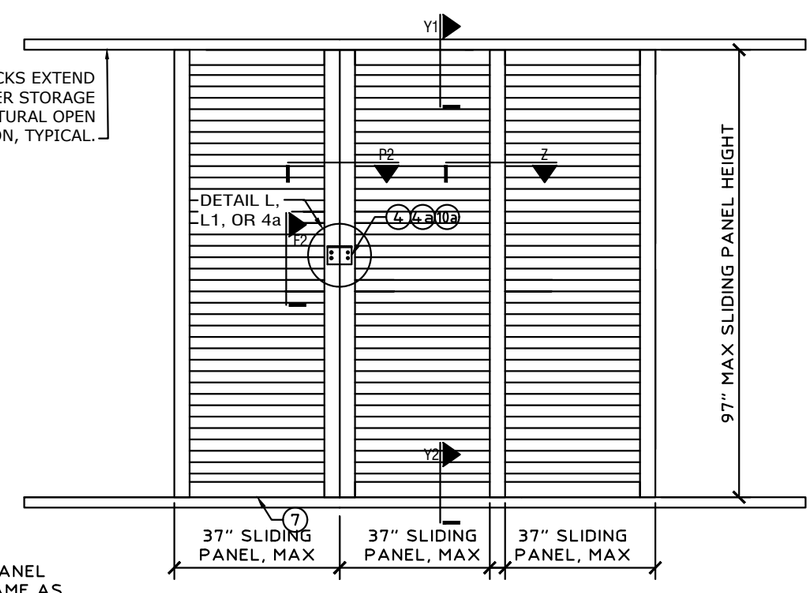

X4 ELEVATION: 3 SLIDING PANELS
SCALE: N.T.S.

FL# 16219.1

ENGINEERING EXPRESS®
POSTAL ADDRESS:
401 W. ATLANTIC AVE R10 BOX 219
DELRAY BEACH, FL 33444
ENGINEERINGEXPRESS.COM

Town & Country INDUSTRIES
Wholesale Aluminum and Building Products
A Division of AGC Supply Co., Inc.
400 WEST MCNAB ROAD, FT. LAUDERDALE, FL 33309

COLONIAL SHUTTER
FLORIDA BUILDING CODE EIGHTH EDITION (2023)
FLORIDA STATEWIDE APPROVAL (FSA FL#16219.1

REMARKS	DRWN	CHKD	DATE
FBC 2020 (20-26168)	CCB	RWN	7/01/20
FBC 2023	MLD	CCB	8/21/23
-	-	-	-
-	-	-	-
-	-	-	-

COPYRIGHT ENGINEERING EXPRESS®

23-64831

SCALE: NTS UNLESS NOTED

8/19/2023 12:43 PM MATTHEW c:\users\matthew\engineering express\production - documents\projects\23-\23-64831 multiple products 2023 fbc update fl 16219\work\2023 fbc\23-64831 - fl16219.1 - dwg.dwg

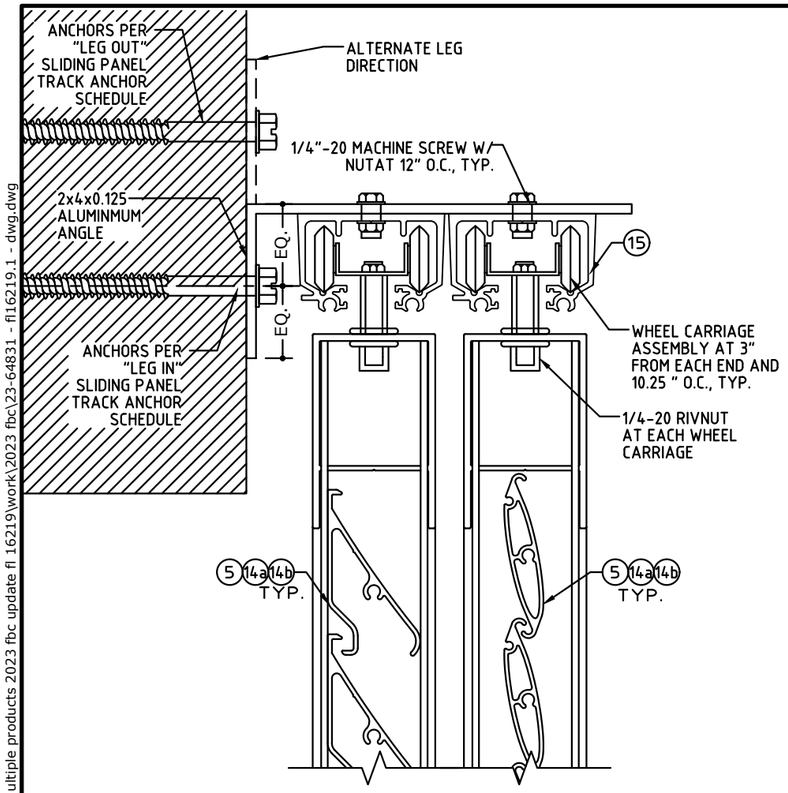

Y1 SLIDING PANEL TOP TRACK
SCALE: N.T.S.

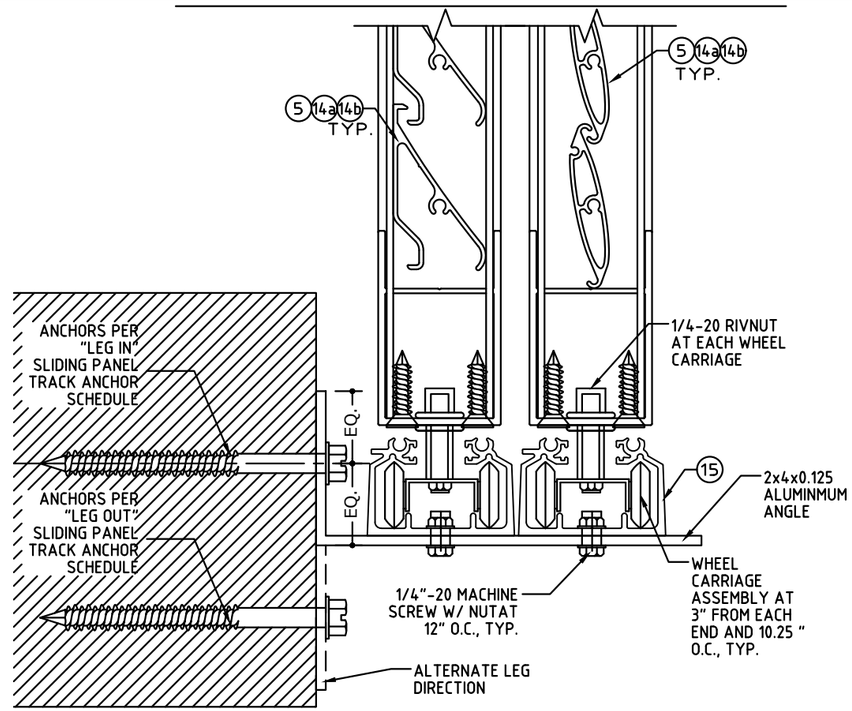

Y2 SLIDING PANEL BOTTOM TRACK
SCALE: N.T.S.

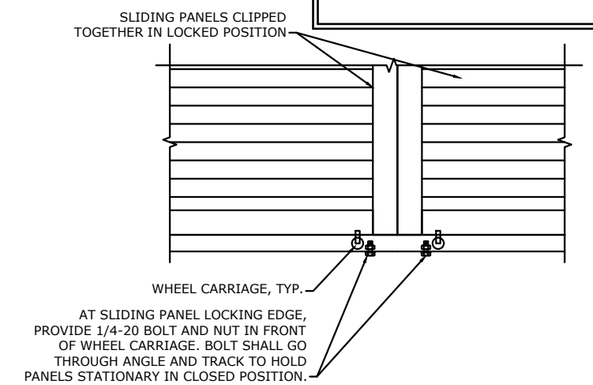

ZZ WHEEL CARRIAGE STOPS FOR SLIDING PANELS
SCALE: N.T.S.

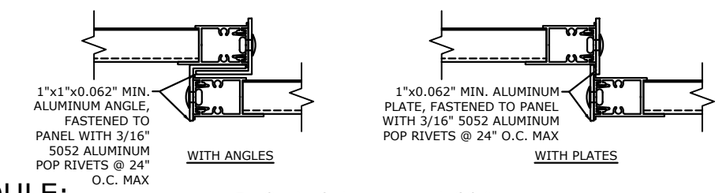

Z SLIDING PANEL INTERLOCK
SCALE: N.T.S.

"LEG IN" SLIDING PANEL TRACK ANCHOR SCHEDULE:

HOST STRUCTURE	ANCHOR	SLIDING PANEL VERTICAL SPAN					
		36"	48"	60"	72"	84"	97"
CONCRETE (3192 PSI MIN.)	1/4" ITW SS TAPCONS W/ 1-3/4" MIN. EMBEDMENT AND 2-1/2" MIN. EDGE DISTANCE	16" O.C.	16" O.C.	16" O.C.	16" O.C.	16" O.C.	16" O.C.
	1/4" DEWALT ULTRACON W/ 1-3/4" MIN. EMBEDMENT AND 2-1/2" MIN. EDGE DISTANCE	16" O.C.	16" O.C.	16" O.C.	16" O.C.	16" O.C.	16" O.C.
CONCRETE (3500 PSI MIN.)	1/4" MILLENIUM MILLFAST W/ 1-3/4" MIN. EMBEDMENT AND 2-1/2" MIN. EDGE DISTANCE	16" O.C.	16" O.C.	16" O.C.	16" O.C.	16" O.C.	16" O.C.
HOLLOW CONCRETE BLOCK	1/4" MILLENIUM MILLFAST W/ 1-1/4" MIN. EMBEDMENT AND 2-1/2" MIN. EDGE DISTANCE	16" O.C.	13" O.C.	11" O.C.	9" O.C.	8" O.C.	7" O.C.
	1/4" ITW SS TAPCONS W/ 1-1/4" MIN. EMBEDMENT AND 2-1/2" MIN. EDGE DISTANCE	15" O.C.	12" O.C.	9" O.C.	8" O.C.	7" O.C.	6" O.C.
	1/4" DEWALT ULTRACON W/ 1-1/4" MIN. EMBEDMENT AND 2-1/2" MIN. EDGE DISTANCE	16" O.C.	13" O.C.	10" O.C.	8" O.C.	7" O.C.	6" O.C.
	5/16" ITW TAPCON XL W/ 1-3/4" MIN. EMBEDMENT AND 4" MIN. EDGE DISTANCE.	16" O.C.	16" O.C.	15" O.C.	13" O.C.	11" O.C.	9" O.C.
	5/16" DEWALT ULTRACON W/ 1-1/4" MIN. EMBEDMENT AND 3-1/8" MIN. EDGE DISTANCE	16" O.C.	16" O.C.	16" O.C.	14" O.C.	12" O.C.	10" O.C.
WOOD (G=0.42 MIN.)	1/4" LAG SCREW W/ 1-1/2" MIN. EMBEDMENT AND 3/4" MIN. EDGE DISTANCE	16" O.C.	16" O.C.	16" O.C.	16" O.C.	16" O.C.	16" O.C.
	#14 SMS OR WOOD SCREW W/ 1-1/2" MIN. EMBEDMENT AND 3/4" MIN. EDGE DISTANCE.	16" O.C.	16" O.C.	16" O.C.	16" O.C.	15" O.C.	13" O.C.

NOTES: TABLE PROVIDES MAXIMUM ANCHOR SPACING FOR INDICATED ANCHOR TYPES AND SLIDING PANEL VERTICAL SPANS FOR "LEG IN" CONDITION. ANCHORS SHALL BE LOCATED 2" MAX FROM TRACK ENDS.
*ALL MILLENIUM MILLFAST SCREWS SHALL HAVE T&C ULTRACOTE

"LEG OUT" SLIDING PANEL TRACK ANCHOR SCHEDULE:

HOST STRUCTURE	ANCHOR	SLIDING PANEL VERTICAL SPAN					
		36"	48"	60"	72"	84"	97"
CONCRETE (3192 PSI MIN.)	1/4" ITW SS TAPCONS W/ 1-3/4" MIN. EMBEDMENT AND 2-1/2" MIN. EDGE DISTANCE	16" O.C.	13" O.C.	10" O.C.	9" O.C.	7" O.C.	6" O.C.
	1/4" DEWALT ULTRACON W/ 1-3/4" MIN. EMBEDMENT AND 2-1/2" MIN. EDGE DISTANCE	16" O.C.	16" O.C.	13" O.C.	11" O.C.	9" O.C.	8" O.C.
CONCRETE (3500 PSI MIN.)	1/4" MILLENIUM MILLFAST W/ 1-3/4" MIN. EMBEDMENT AND 2-1/2" MIN. EDGE DISTANCE	16" O.C.	13" O.C.	10" O.C.	9" O.C.	7" O.C.	6" O.C.
HOLLOW CONCRETE BLOCK	1/4" MILLENIUM MILLFAST W/ 1-1/4" MIN. EMBEDMENT AND 2-1/2" MIN. EDGE DISTANCE	7" O.C.	5" O.C.	4" O.C.			
	1/4" ITW SS TAPCONS W/ 1-1/4" MIN. EMBEDMENT AND 2-1/2" MIN. EDGE DISTANCE	6" O.C.	4" O.C.	4" O.C.	3" O.C.	3" O.C.	
	1/4" DEWALT ULTRACON W/ 1-1/4" MIN. EMBEDMENT AND 2-1/2" MIN. EDGE DISTANCE	6" O.C.	5" O.C.	4" O.C.	3" O.C.	3" O.C.	
	5/16" ITW TAPCON XL W/ 1-3/4" MIN. EMBEDMENT AND 4" MIN. EDGE DISTANCE.	10" O.C.	7" O.C.	6" O.C.	5" O.C.	4" O.C.	4" O.C.
	5/16" DEWALT ULTRACON W/ 1-1/4" MIN. EMBEDMENT AND 3-1/8" MIN. EDGE DISTANCE	10" O.C.	8" O.C.	6" O.C.			
WOOD (G=0.42 MIN.)	1/4" LAG SCREW W/ 1-1/2" MIN. EMBEDMENT AND 3/4" MIN. EDGE DISTANCE	16" O.C.	14" O.C.	11" O.C.	10" O.C.	8" O.C.	7" O.C.
	#14 SMS OR WOOD SCREW W/ 1-1/2" MIN. EMBEDMENT AND 3/4" MIN. EDGE DISTANCE.	13" O.C.	10" O.C.	8" O.C.	7" O.C.	6" O.C.	5" O.C.

NOTES: TABLE PROVIDES MAXIMUM ANCHOR SPACING FOR INDICATED ANCHOR TYPES AND SLIDING PANEL VERTICAL SPANS FOR ALTERNATE "LEG OUT" CONDITION. ANCHORS SHALL BE LOCATED 2" MAX FROM TRACK ENDS.
*ALL MILLENIUM MILLFAST SCREWS SHALL HAVE T&C ULTRACOTE

COLBY BENNARDO, PE
PE# 95197 CA# 9885

SPACE RESERVED FOR DIGITAL SEAL INFORMATION

WHEN DIGITALLY SEALED, THIS NOTE SHALL BE FULLY COVERED ON SHEET 1

WHEN PRINTED OR PHYSICALLY SEALED, SEAL OF CERTIFYING ENGINEER, AND DATE OF CERTIFICATION SHALL BE SHOWN TO THE RIGHT.

IN ALL CASES, CERTIFYING ENGINEER AND CERT OF AUTH AS LISTED ON STAMP

COLBY BENNARDO LICENSE No 95197 STATE OF FLORIDA PROFESSIONAL ENGINEER
SIGNED: 08/21/2023

FL# 16219.1

ENGINEERING EXPRESS®
POSTAL ADDRESS:
401 W. ATLANTIC AVE R10 BOX 219
DELRAY BEACH, FL 33444
ENGINEERINGEXPRESS.COM

Town&Country INDUSTRIES
Wholesale Aluminum and Building Products
A Division of AGC Supply Co., Inc.
400 WEST MCNAB ROAD, FT. LAUDERDALE, FL 33309

COLONIAL SHUTTER
FLORIDA BUILDING CODE EIGHTH EDITION (2023)
FLORIDA STATEWIDE APPROVAL (FSA FL#16219.1

REMARKS	DRWN	CHKD	DATE
FBC 2020 (20-26168)	CCB	RWN	7/01/20
FBC 2023	CCB	CCB	8/21/23
	MLD		

COPYRIGHT ENGINEERING EXPRESS®

23-64831

SCALE: NTS UNLESS NOTED

8/19/2023 12:43 PM MATTHEW c:\users\matthew\engineering express\production - documents\projects\23-\23-64831 multiple products 2023 fbc update fl 16219\work\2023 fbc\23-64831 - fl16219.1 - dwg.dwg

8/19/2023 12:43 PM MATTHEW c:\users\matthew\engineering express\production - documents\projects\23-\23-64831 multiple products 2023 fbc update fl 16219\work\2023 fbc\23-64831 - fl16219.1 - dwg.dwg

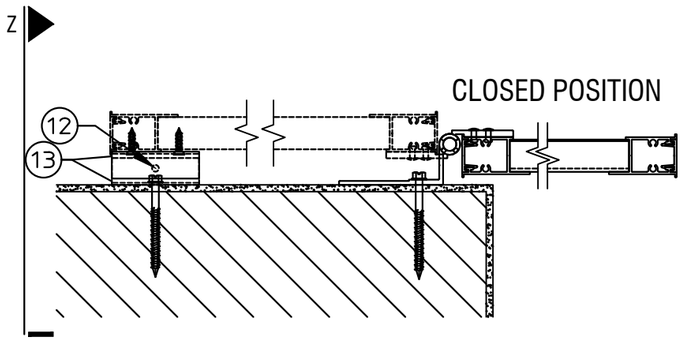

R PLAN VIEW 1
SCALE: 1-1/2" = 1'-0"

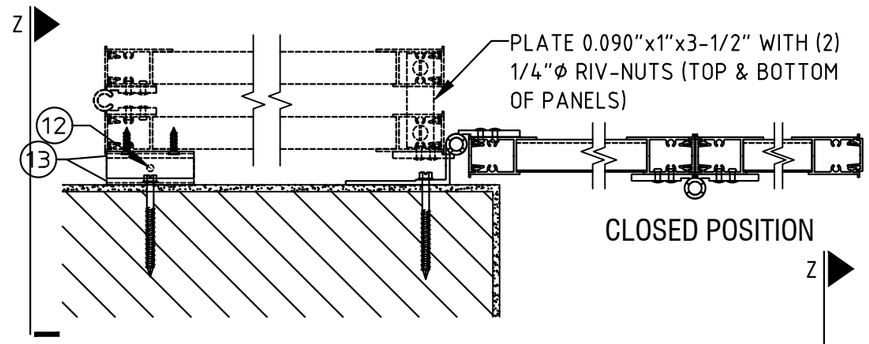

S PLAN VIEW 2
SCALE: 1-1/2" = 1'-0"

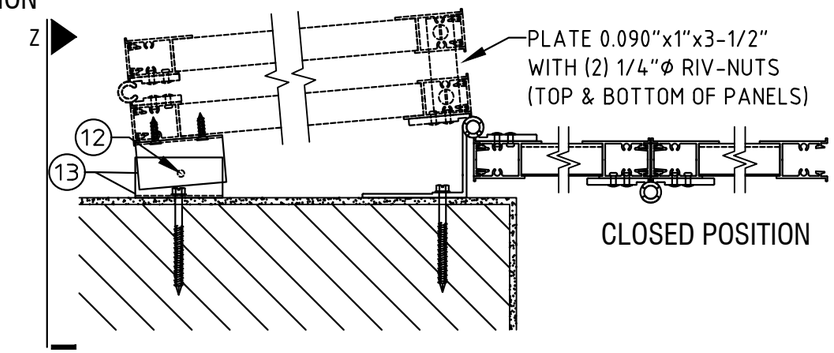

T PLAN VIEW 3
SCALE: 1-1/2" = 1'-0"

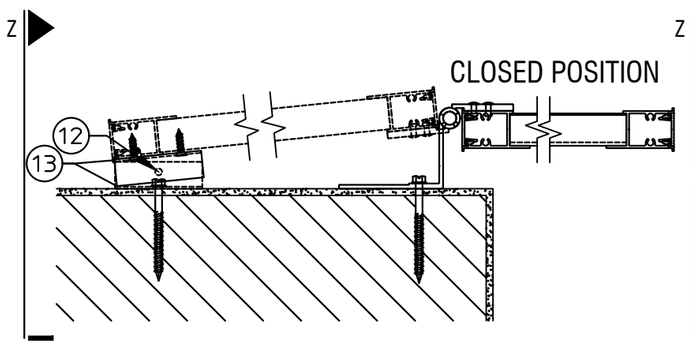

U PLAN VIEW 4
SCALE: 1-1/2" = 1'-0"

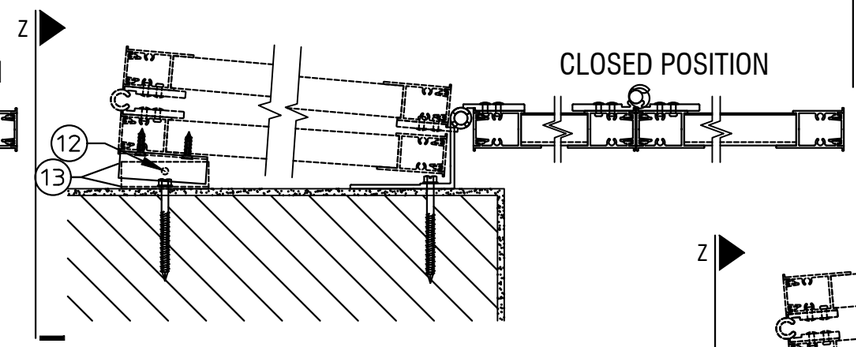

V PLAN VIEW 5
SCALE: 1-1/2" = 1'-0"

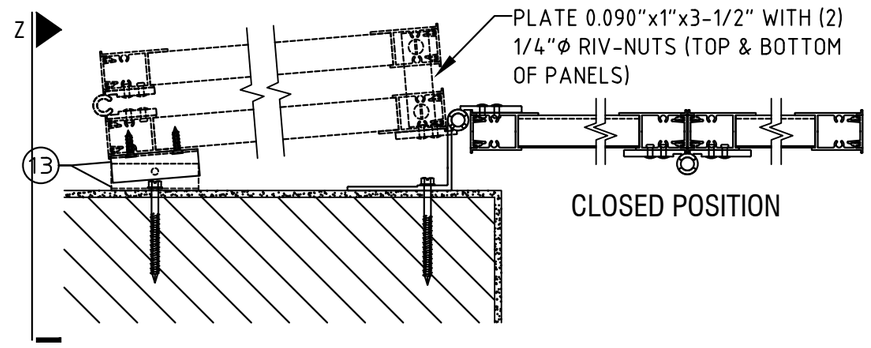

Y PLAN VIEW 8
SCALE: 1-1/2" = 1'-0"

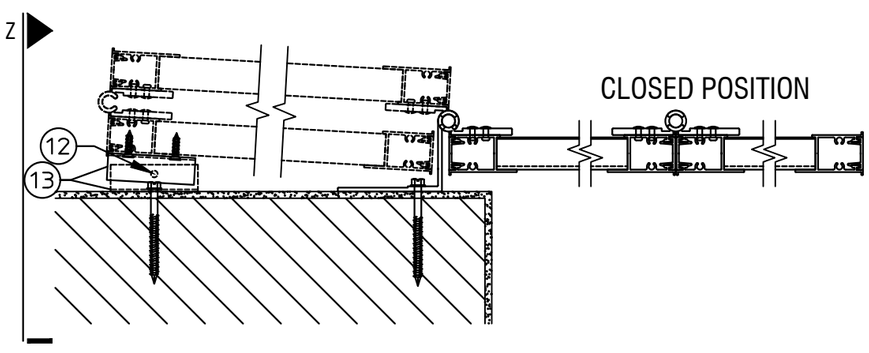

W PLAN VIEW 7
SCALE: 1-1/2" = 1'-0"

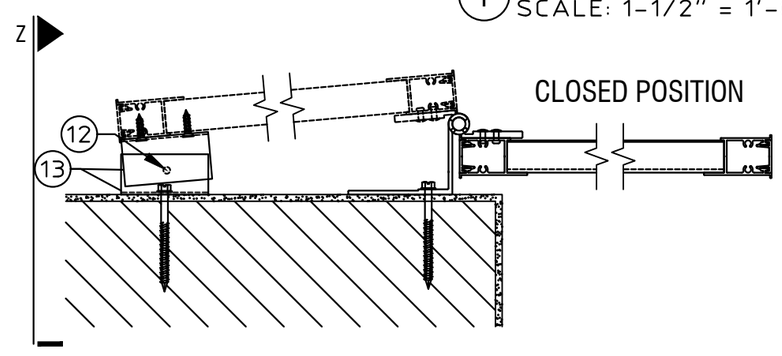

X PLAN VIEW 6
SCALE: 1-1/2" = 1'-0"

COLBY BENNARDO, PE
PE# 95197 CA# 9885

SPACE RESERVED FOR DIGITAL SEAL INFORMATION

WHEN DIGITALLY SEALED, THIS NOTE SHALL BE FULLY COVERED ON SHEET 1

WHEN PRINTED OR PHYSICALLY SEALED, SEAL OF CERTIFYING ENGINEER, AND DATE OF CERTIFICATION SHALL BE SHOWN TO THE RIGHT.

IN ALL CASES, CERTIFYING ENGINEER AND CERT OF AUTH AS LISTED ON STAMP

COLBY BENNARDO LICENSE No 95197 STATE OF FLORIDA PROFESSIONAL ENGINEER
SIGNED: 08/21/2023

FL# 16219.1

ENGINEERING EXPRESS®
POSTAL ADDRESS:
401 W. ATLANTIC AVE R10 BOX 219
DELRAY BEACH, FL 33444
ENGINEERINGEXPRESS.COM

Town&Country INDUSTRIES Wholesale Aluminum and Building Products A Division of ACC Supply Co., Inc.
400 WEST MCNAB ROAD, FT. LAUDERDALE, FL 33309

COLONIAL SHUTTER
FLORIDA BUILDING CODE EIGHTH EDITION (2023)
FLORIDA STATEWIDE APPROVAL (FSA FL#16219.1

REMARKS	DRWN	CHKD	DATE
FBC 2020 (20-26168)	CCB	RWN	7/01/20
FBC 2023	MLD	CCB	8/21/23
-	-	-	-
-	-	-	-
-	-	-	-

COPYRIGHT ENGINEERING EXPRESS®

23-64831

SCALE: NTS UNLESS NOTED